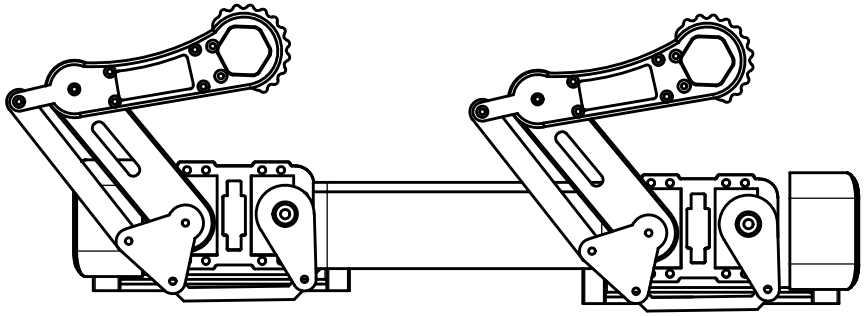

SCALE 1:4

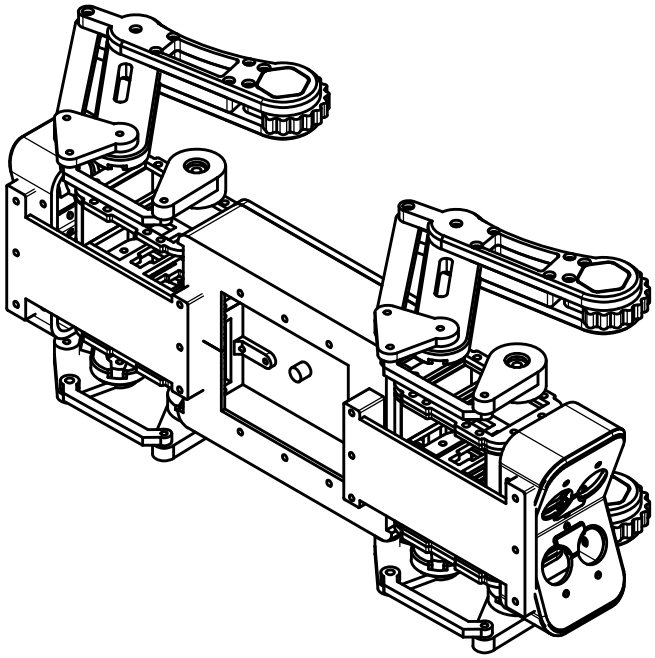

SCALE 1:4

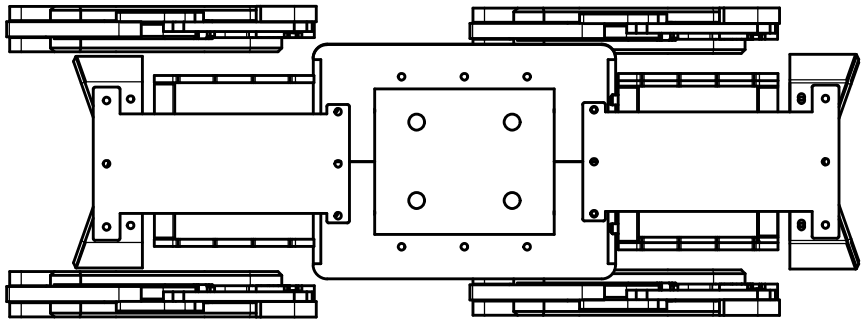

SCALE 1:4

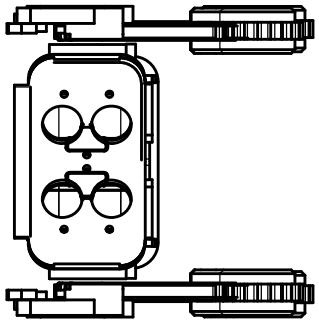

SCALE 1:4

UNLESS OTHERWISE SPECIFIED, DIMENSIONS ARE IN INCHES .XX = ±.0- .XXX = ±.00- .XXXX = ±.000- ANGULAR = ± ° FRACTIONAL = ± SURFACE FINISH		NAME	DATE
	DRAWN	JACOB RICKETTS	03/16/2026
	CHECKED		
	APPROVED		
DO NOT SCALE DRAWING			
BREAK ALL SHARP EDGES AND REMOVE BURRS			
THIRD ANGLE PROJECTION	MATERIAL	FINISH	

TITLE: Quadrupedal Robot Dog
V8
2026

SIZE	DWG NO.	REV.
A	n/a	8

SCALE	WEIGHT	SHEET
1:8	tbd	1 of 1